Units 5 -7 Luton Street
Liverpool
L5 9XR
T: 0844 800 7785
F: 0844 800 7738

www.totalcubicles.co.uk
sales@totalcubicles.co.uk

PJ 1 Continuous Joint - used for vertical & horizontal jointing of panels

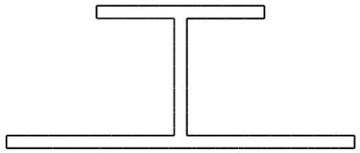

PJ 2 Top & Bottom Runner Rail & End Cap - used to finish ends as a top & bottom track cut edges top & bottom as well as the end of a straight run

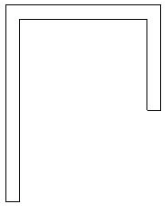

PJ 3 Internal Corner - gives a smooth curve to the joint, aesthetically pleasing & eliminates bacteria traps casy to clean

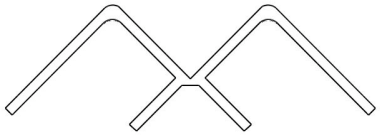

PJ 4 External Corner - allows columns & ducts to be easily overcome

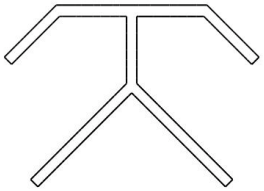

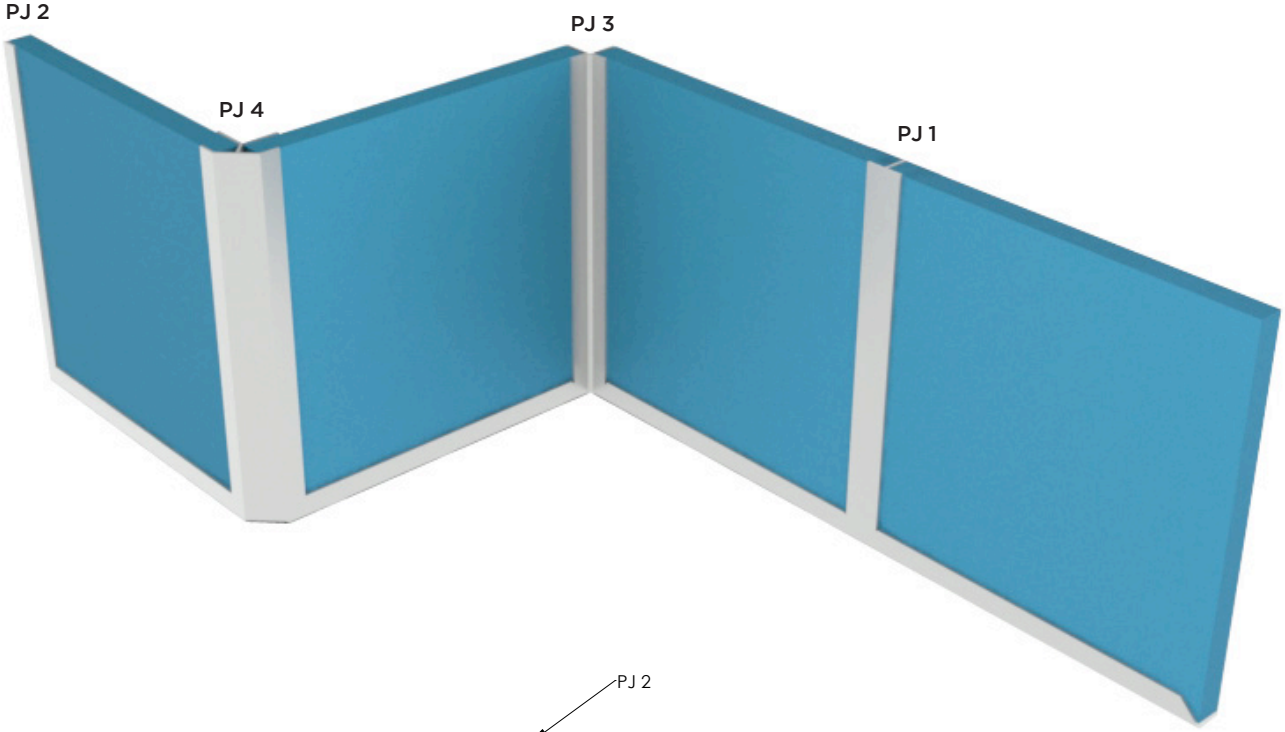

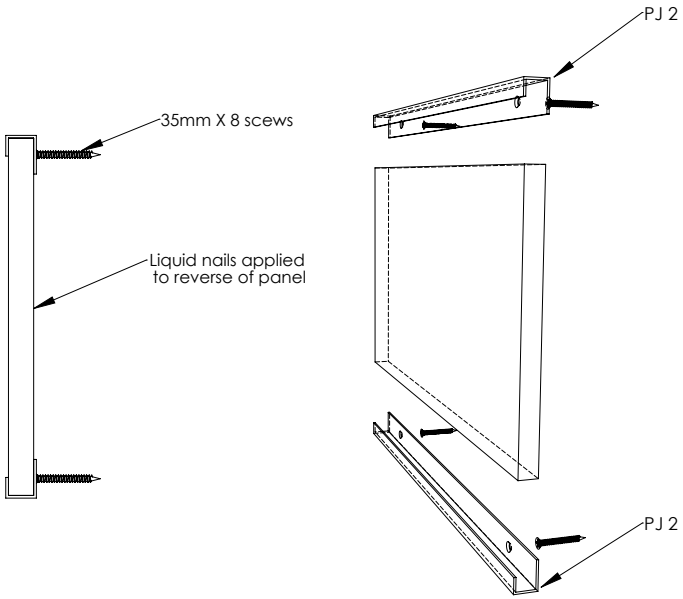

Easy-Clad and Showerwall Panel Systems

Easy-clad and showerwall systems offer a cost effective cladding solutions to cover large wall area's effortlessly. It's main benefit is faster and cleaner installation compared to tiling, utilising either 12m plywood or MDF, faced in a decorative laminate colour matching for either your cubicles or projects.

Applications include toilets, showers, hospitals, sports halls, swimming baths, office blocks, schools, leisure centres etc.

Easy-clad and showerwall eliminates the need for costly time consuming tiling and provides a hygienic free solution.

Jointing extrusions come in 3 metre lengths and are available in satin anodised aluminium, other colours are available upon request.